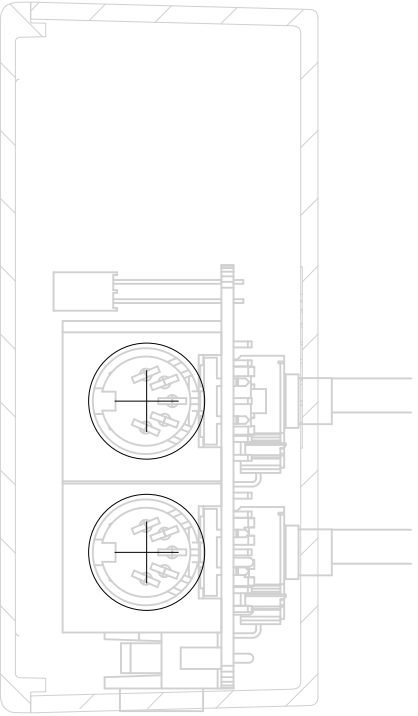

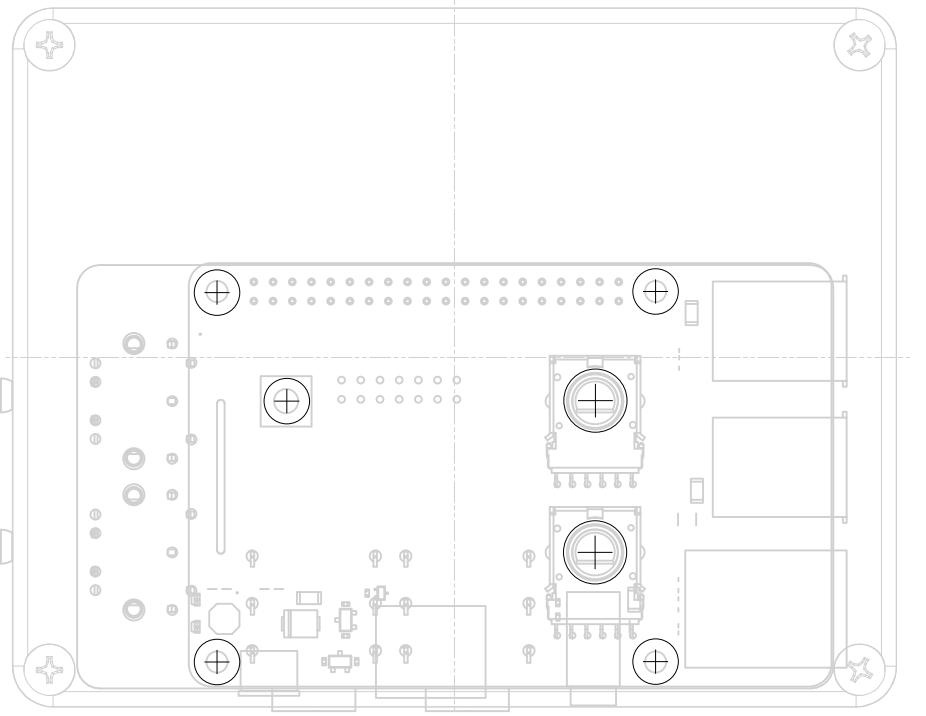

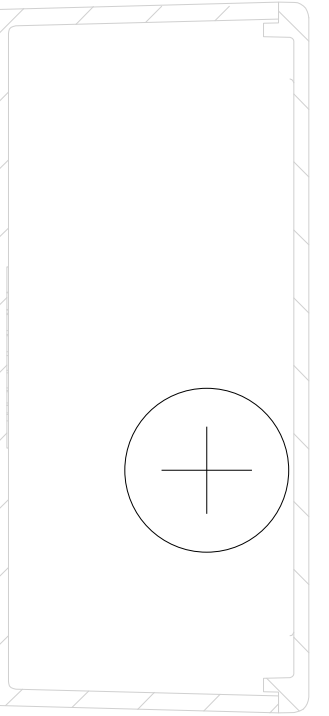

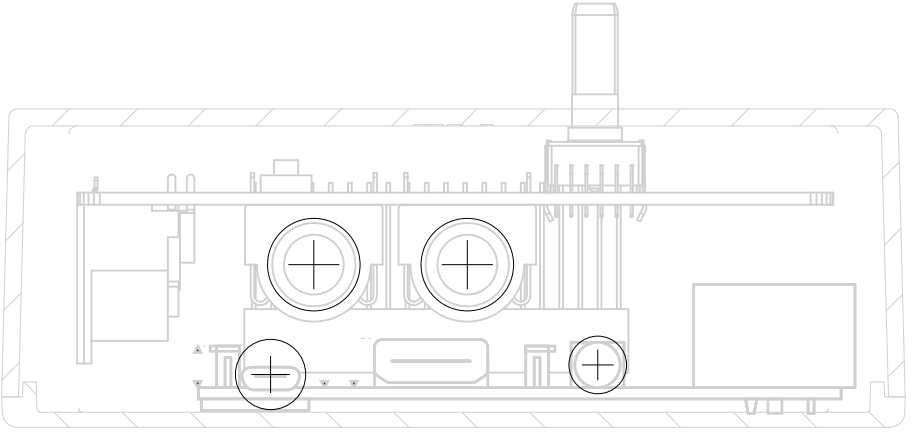

PiSound drilling guide for a Hammond 1590BBS enclosure.

oootini 2017